Rewarding Learning

Centre Number

Candidate Number

General Certificate of Secondary Education
2023

Technology and Design

Unit 2
Option A:
Electronic and Microelectronic
Control Systems

[GTY21]

GTY21

TUESDAY 20 JUNE, MORNING

TIME

1 hour 30 minutes.

INSTRUCTIONS TO CANDIDATES

Write your Centre Number and Candidate Number in the spaces provided at the top of this page.
You must answer the questions in the spaces provided.
Do not write outside the boxed area on each page or on blank pages.
Questions which require drawing or sketching should be completed using an H.B. pencil.
All other questions must be completed using black ink only.
Do not write in pencil or with a gel pen.
Answer **both** questions.

INFORMATION FOR CANDIDATES

The total mark for this paper is 100.
Quality of written communication will be assessed in Question **1(e)**.
Figures in brackets printed down the right-hand side of pages indicate the marks awarded to each question or part question.
The Formula sheet is on page 3.

13430.06**R**

BLANK PAGE

DO NOT WRITE ON THIS PAGE

(Questions start on page 4)

Formulae for GCSE Technology and Design

You should use, where appropriate, the formulae given below when answering questions which include calculations.

1 Potential Difference = current × resistance ($V = I \times R$)

2 For potential divider $V_{out} = \frac{R_2}{(R_1 + R_2)} \times V_{in}$

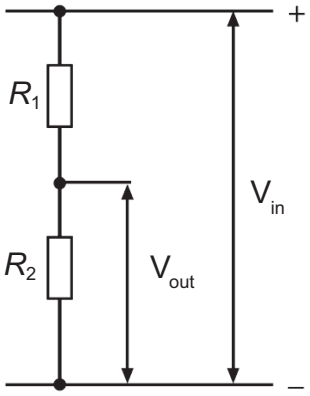

3 Series Resistors $Rt = R1 + R2 + ... + Rn$

4 Parallel Resistors $\frac{1}{R_t} = \frac{1}{R_1} + \frac{1}{R_2}$ or $R_t = \frac{R_1 \times R_2}{R_1 + R_2}$

5 Time Constant $T = R \times C$

6 Period $T = \frac{1}{f}$

7 Frequency (H_z) $f = \frac{1.44}{(R_1 + 2R_2)C}$ for the output of an astable circuit using a 555 timer

8 Time $T = 1.1 \times C \times R$ for the output of a monostable circuit using a 555 timer

[Turn over

Answer **all** questions

1 **(a)** **(i)** In the space below, produce a neat sketch of the symbol for a thyristor.

[2]

(ii) Clearly label and name each of the three legs of the thyristor. [3]

(iii) A thyristor is often used as a latching switch. Explain the operation of a latching switch in a circuit.

_____

_____ [2]

(b) **Fig. 1** shows a Potential Divider circuit diagram.

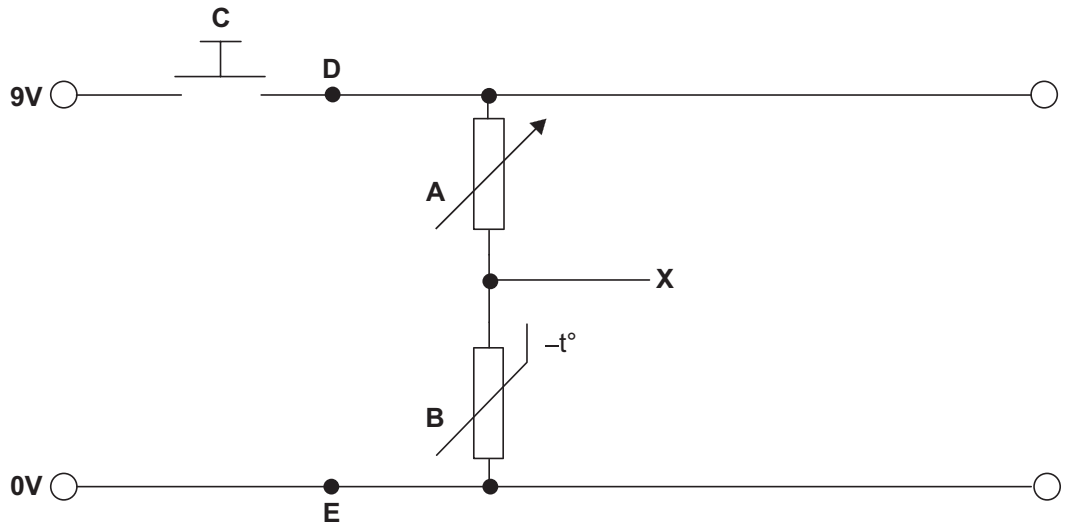

Source: © Chief Examiner

Fig. 1

(i) State another name for this circuit.

_____ [1]

(ii) Name the components shown by their electronic symbols **A** and **B** in **Fig. 1**.

Component A _____ [1]

Component B _____ [1]

(iii) What type of switch is shown at **C** in **Fig. 1**?

_____ [1]

(iv) Explain how the voltage at point **X**, in **Fig. 1**, is obtained and how its value depends on components **A**, **B** and **C**.

_____

_____

_____

_____ [4]

(c) The circuit in **Fig. 1** is to be developed by including a resistor and an LED between the 9 V and 0 V rails at points **D** and **E**.

(i) Sketch this addition to the circuit in **Fig. 1**. [4]

(ii) With reference to the labelled component **C**, explain how the additional parts will function and operate in the circuit.

_____

_____

_____

_____ [4]

(iii) What purpose will this additional part of the circuit serve?

_____ [1]

(iv) If the LED used is rated at 1.9 V, 25 mA, calculate in the space below, the minimum value that should be used for the resistor.

Candidates need to show their working out in the space below.

Answer _____ [4]

(d) **(i)** Develop the circuit in **Fig. 1** to enable an NPN transistor to operate a relay when required. Include any additional components that may be required. Label the NPN transistor and the relay. [7]

(ii) In the space below, state the names of any additional components used and the reason for their use in the circuit.

Additional components and their use

_____

_____

_____

_____ [4]

(iii) Outline **one** possible use for the relay in this circuit.

Use _____

_____ [1]

(e) Discuss the purpose of using flowcharts. Your answer should begin by providing a general statement, which explains why they are used. Then choose **four** flowchart elements and describe their purpose within a flowchart.

Quality of written communication will be assessed in this question.

[10]

[Turn over

2 **(a)** **(i)** Analogue and digital inputs are used in microcontroller circuits.
Describe the difference between a digital and an analogue signal.

_____

_____

_____

_____ [2]

(ii) Sketch on the diagrams in **Fig. 2** a typical digital signal and a typical analogue signal.

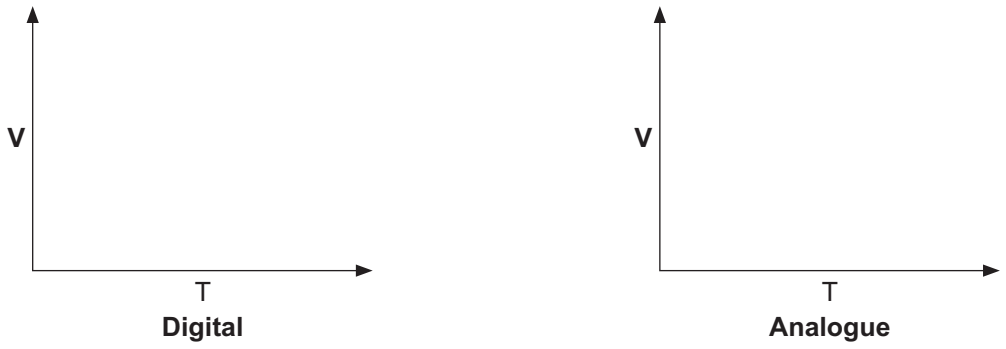

Source: © Chief Examiner

Fig. 2

[2]

(b) Complete **Table 1** for the four electronic components listed.

Table 1

Component	Digital or Analogue	Input or Output
Thermistor		
Solenoid		
Buzzer		
Moisture Sensor		

[8]

(c) Compare the use of a microcontroller (PIC) with the use of a 555 timer IC to control circuits by giving **two** advantages of the use of a PIC microcontroller.

Advantage 1: _____

_____

_____

Advantage 2: _____

_____

_____ [2]

[Turn over

(d) A jeweller's shop has installed a display stand to showcase three of its most popular selling watches. The display stand is a revolving turntable and the watches are located around the edge of the stand, 120° apart as shown in **Fig. 3**. One complete revolution of the display stand takes 12 seconds. The display stand operates automatically when the shop is unlocked in the morning and stops operating when the shop is closed and locked up in the evening.

The display stand can rotate clockwise, anticlockwise or remain stationary as required. Four LEDs are located above the front of the stand and are used to illuminate whichever watch is at the front of the stand. A buzzer also operates for 10 seconds when the display is first operated each morning.

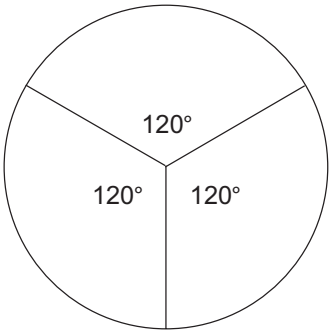

Source: © Chief Examiner

Fig. 3

Tables 2 and **3** show the Input and Output Bits.

A PIC microcontroller is used to control the operations. The PIC has 5 inputs and 8 outputs. An "X" means not used.

Table 2

Bit	4	3	2	1	0
PIC Inputs	Shop Open	Shop Closed	x	x	x

Table 3

Bit	7	6	5	4	3	2	1	0
PIC Outputs	x	Turntable Motor Clockwise	Turntable Motor Anticlockwise	Buzzer	Red LED	White LED	Yellow LED	Blue LED

(i) Complete the flowchart in **Fig. 4** to represent the **ROTATE** macro as follows:

The display stand rotates in a clockwise direction for two complete revolutions, stops momentarily and then rotates anticlockwise for two revolutions to its original position before stopping.

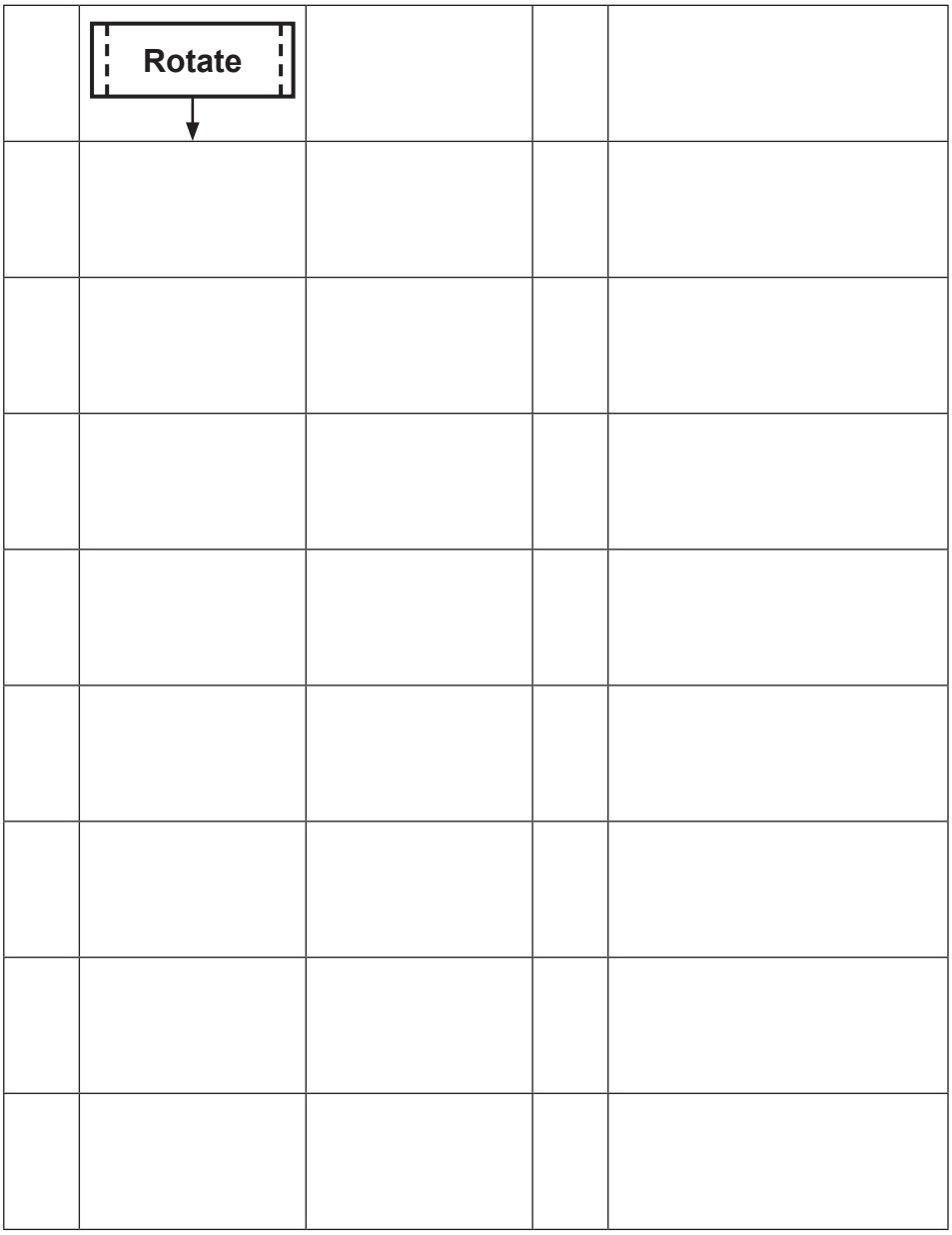

Fig. 4

[9]

[Turn over

(ii) Complete the flowchart in **Fig. 5** to represent the **DISPLAY** macro as follows:

The turntable rotates clockwise and stops when the next watch reaches the front position of the stand. The four LEDs switch on together to illuminate the stationary watch for six seconds. This process repeats another eight times before the macro ends. Your solution should include the required 8 bit pattern to light the four LEDs.

	Display			Bit Pattern

Fig. 5

[15]

(iii) Use **Fig. 6** to complete the flowchart for the full operation of the display unit.

When the shop is unlocked, the **ROTATE** macro turns on followed by the **DISPLAY** macro. The sequence continues until the shop is locked. It then waits for the shop to open again before continuing.

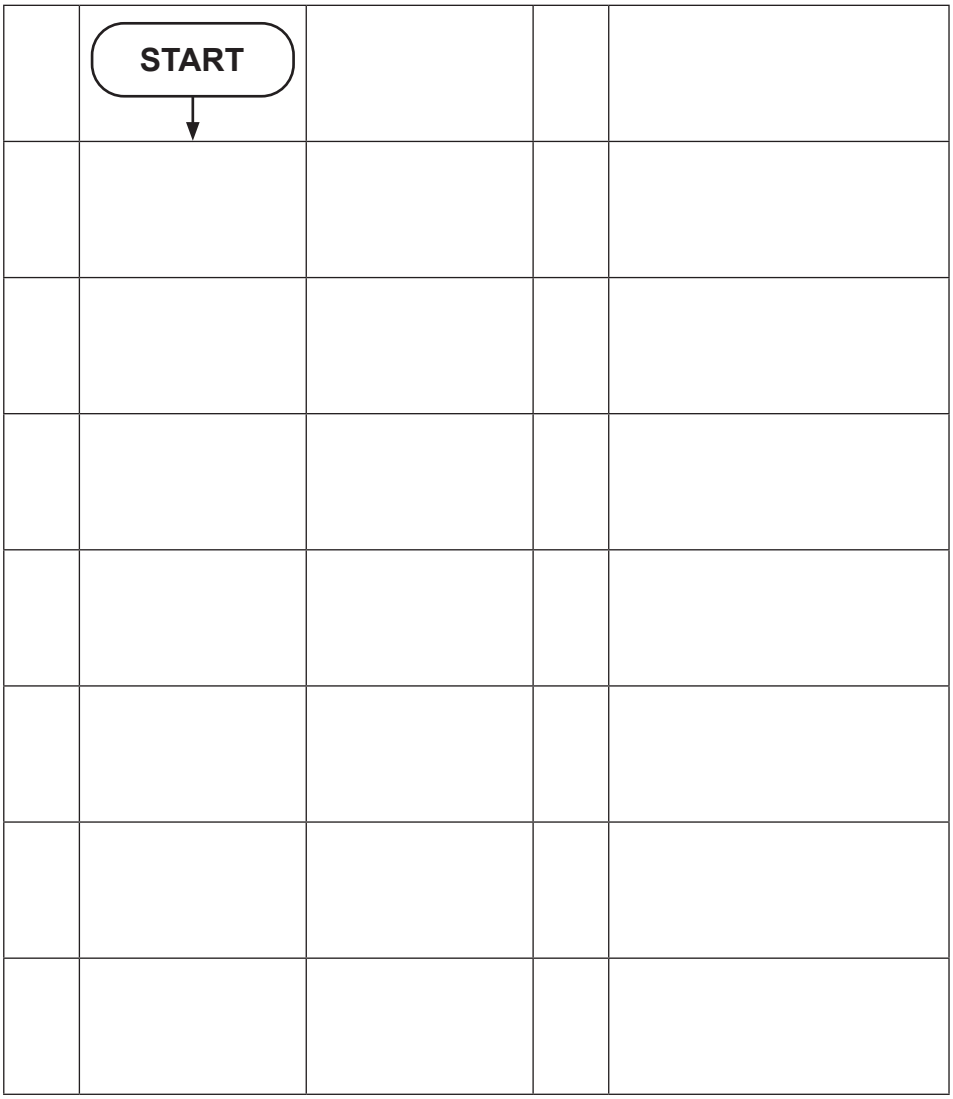

Fig. 6

[12]

THIS IS THE END OF THE QUESTION PAPER

DO NOT WRITE ON THIS PAGE

For Examiner's use only	
Question Number	Marks
1	
2	
Total Marks	

Examiner Number

Permission to reproduce all copyright material has been applied for.
In some cases, efforts to contact copyright holders may have been unsuccessful and CCEA will be happy to rectify any omissions of acknowledgement in future if notified.